WINTER 2018 NEWSLETTER

THE SOCIETY FOR ADVANCED ROCKET PROPULSION

WHAT WE'RE UP TO

Writer: Ben Yan

Winter quarter is notoriously difficult for juniors in UW's Aeronautical and Astronautical Engineering department, forcing students to balance schoolwork, clubs, and jobs. In this issue, we talk to juniors in leadership positions in their respective SARP sub teams, and learn about how they've made progress as the quarter has gone on.

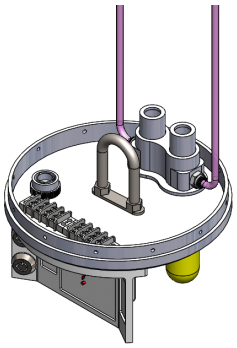

CAD model of the recovery assembly

"I think we can all agree that the time for space exploration is now, and in allowing our members to develop their technical abilities, we are building the engineering foundation for the coming decades."
- Arnela Grebovic

Aaron Goldfogel ('19), recovery lead, has found a balance to succeed. "We're doing great," he says, "right on track to launch in May." While his team has not locked in a design for the Design Freeze yet, "the good news is that our parts [...] are unconstrained," Aaron says. The recovery system is given freedom to design their parts as they need, with other teams working around them. This is because the recovery team's system is a critical component to the rocket which ensures the safe rocket landing. Aaron states that testing and reviewing all systems to make sure everything the team does is incredibly robust and redundant is a significant focus.

Above: Cody Olson machining the payload coupler (the joint that connect the body tube to the nosecone)

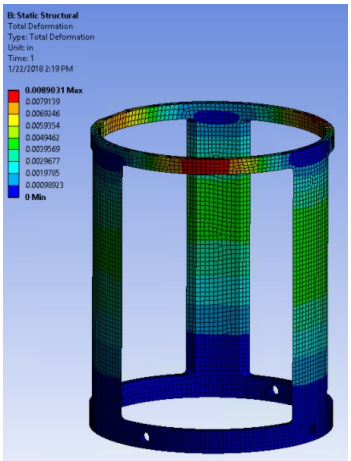

Above: Finite element analysis stress visualization of the recovery coupler

Letter from the Chief Engineer:

Dear Reader,

Welcome back to another edition of the SARP newsletter. The SARP team is hard at work this quarter finalizing designs, manufacturing, and even testing. We have some exciting things coming up and are very excited to share those with you in this newsletter and in the issues to come. I think we can all agree that the time for space exploration is now, and in allowing our members to develop their technical abilities, we are building the engineering foundation for the coming decades. Our team has so much to offer with a diverse set of engineering disciplines. SARP members have opportunity to work on whatever gets them excited. The Design Freeze will be on March 5th and the team is hard at work to meet this deadline. This will mark the end of any design changes and the team will move full speed into manufacturing and testing, all in preparation for our test launch in May. We have also assembled a team to do more analysis and modeling (an example of which shown to the left) than ever before to better understand the rocket's performance and behavior.

Enjoy!

Arnela Grebovic

WHAT WE'RE UP TO (CONT'D):

Remote fill lead, Kevin Chau ('19), has a similar experience and philosophy regarding both the Preliminary Design Review (PDR) and design freeze. Despite having to juggle lab, class, outside research, and a 3-hour-long round-trip commute, Kevin nonchalantly remarks that "the PDR went well!"

Echoing Aaron's thoughts, Kevin detailed the difficulty in translating designs and models done in simulation to a working rocket.

On top of designing a completely new remote fill system, he's had to learn on the job how to coordinate the design of the system which impacts multiple other projects on the rocket. Even though this will be his third year on SARP, "it's my first time leading a team on propulsion; last year I was working on the umbilical by myself." Kevin takes pride in his project, and sees himself taking on even more of a role in propulsion in the upcoming academic year.

Austin Cassayre ('19) has had a slightly different experience since our last newsletter. PDRs went well for his sub team, but "the main concerns from industry and faculty was in our fin can design (which we'll expand on in the next page). The slots in the tubes were worrisome spots for stress concentrations... so we moved away from that." He reinforces the idea that design will always be iterative, but coming from a team that gives the rocket its shape and is heavily reliant on everything fitting together, Austin wants everything to get locked in as early as possible.

He leads by example: The manufacturing processes for several key components have been ready to go, and some have even had practice builds. Austin says that "almost everything [since presenting the PDR] has more or less stayed the same, but the payload couplers and other components are dependent other teams' designs. As they keep changing, we need to keep changing." All he really wants to do is start committing and building the team's parts.

Kevin Chau (center) in during a Propulsion leads meeting

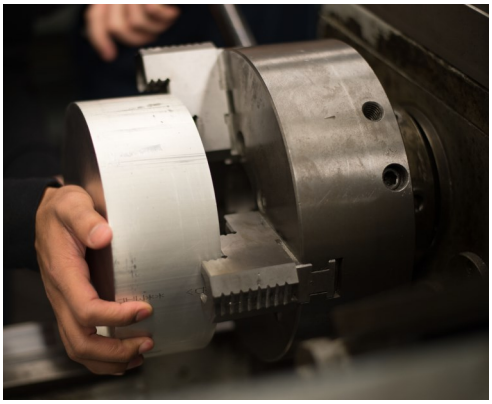

Fitting a block of aluminum to be machined into the recovery coupler

Austin Cassayre preparing the team for the first practice composite layup

DESIGN HIGHLIGHT: FIN CAN

Interview with Julian Woo

Every year, SARP iterates and improves on what was previously accomplished. Julian Woo ('19) details his project's lifecycle - replacing the old fin can with a system that allows easy replacement of the rocket's fins:

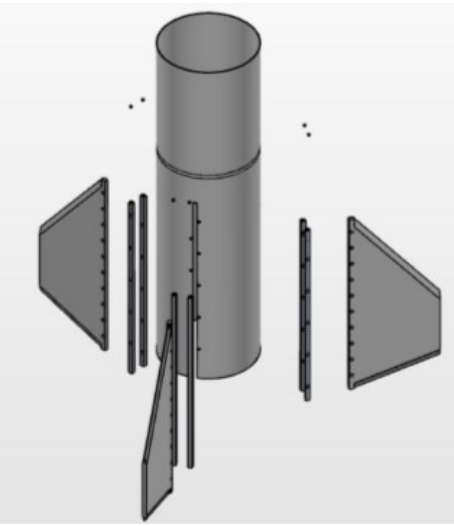

Exploded view of a CAD model of the proposed fin can assembly

Where is your project now?

"Originally we were going to go ahead with the swappable fin design, they were appealing for not just transportation, but also, in general, for any problems that occur at any point along the route - from manufacturing to launch time. Being able to switch out fins at any time is very nice. However, creating three perfect slits across a cylindrical body is going to be extremely challenging, especially since it's very tough carbon fiber. We'd have to design some type of mechanical device that allows us to create those slits, and we would have to take into account that, since the material is composite, that we would be working with a lot of fibers in 0, 45, and 90 degrees, which may create significant problems. If we made a cut along one axis, we'd create problems along the other axis, so we decided to forgo that idea. Instead we're going with a more developed idea, where the fins aren't as replaceable but they just slot into holes connected by bolts from the inside frame of the rocket, inside the tube.

What makes the manufacturing process so difficult?

If, for example, we went forward with 4 fins as a cross, it'd be a lot more simple - we could even just use a bandsaw. But since the slits are 120 degrees between each fin, trying to do that would require us to somehow have access to a bandsaw that has room physically underneath the cutting surface to push through. In addition to this, we have to ensure the bandsaw's cutting accuracy is on point. One of our ideas to try to tackle this before we did the layups [of the composite material], was to make the slits beforehand [at 120 degrees] and place the layers on top of each other, but we realized that once we went to 4, 5, or 6 layers of composite, rounding and stretching the material would lose the level of accuracy that we'd need.

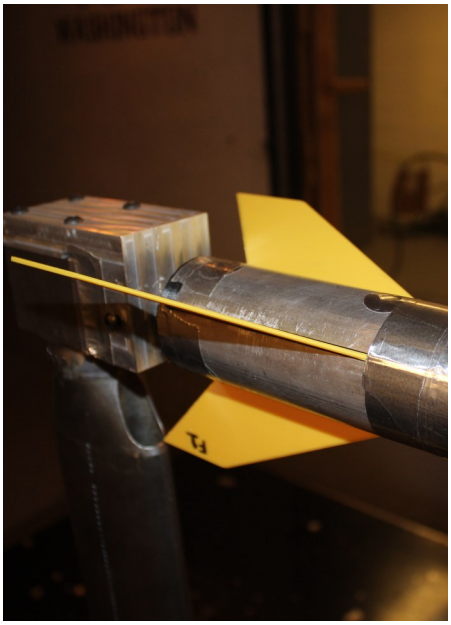

SARP model rocket mounted for Kirsten Wind Tunnel test with fin geometry F1

To our readers who might not know, what is a layup?

A layup is when you take a ball and shoot it through a hoop (laughs). We like to work with carbon fiber. What we're really attracted to is how, not only is it very lightweight, but it's also very durable for its strength. What we can do is essentially magnify that strength by placing multiple layers of carbon fiber on top of each other with a specific glue that allows it to stick together. The neat thing about this is that not only is it very thin, but also very strong, lightweight, and still allows it to be malleable. The only minor concern is that when they're cutting the carbon fiber, the fibers fly out during the cutting process and you need very specific personal protective equipment because of its carcinogenic qualities.

> **"We like to work with carbon fiber. What we're really attracted to is how, not only is it very lightweight, but it's also very durable for its strength."**
> ***-Julian Woo '19***

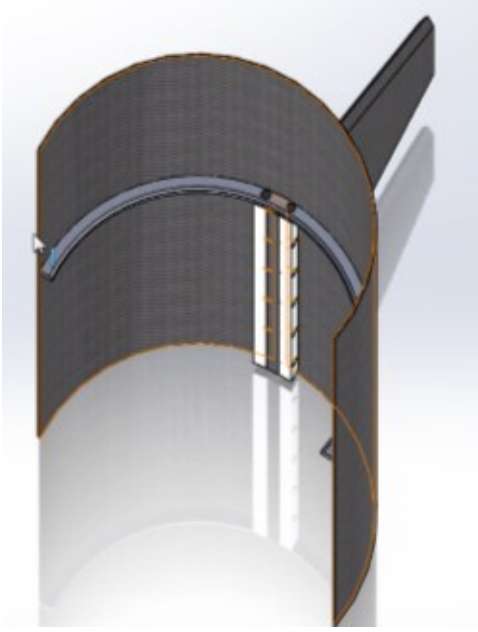

Slot mechanism for proposed fin can

THANK YOU TO OUR SUPPORTERS!

The Kim Family
Larry Shatos
Queenie Chu
Thomas Ortman

facebook.com/uwsarp/

@uwsarp

sarpuw@gmail.com

sarpuw.com

This year's leadership team at the Preliminary Design Review in January. From left to right: Sabrina Tong, Kiefer Dundas, Lexi Ott, Arnela Grebovic, Tyler McIrvin, Aaron Goldfogel

SARP 2017-2018 SCHEDULE

OCT: Design

DEC: Internal PDR
(Preliminary Design Review)

JAN: Industry PDR

FEB-APR: Manu-facturing & Testing

MAY: Unveiling

MAY: Test Launch
(Brothers, Oregon)

JUN: Spaceport America Cup